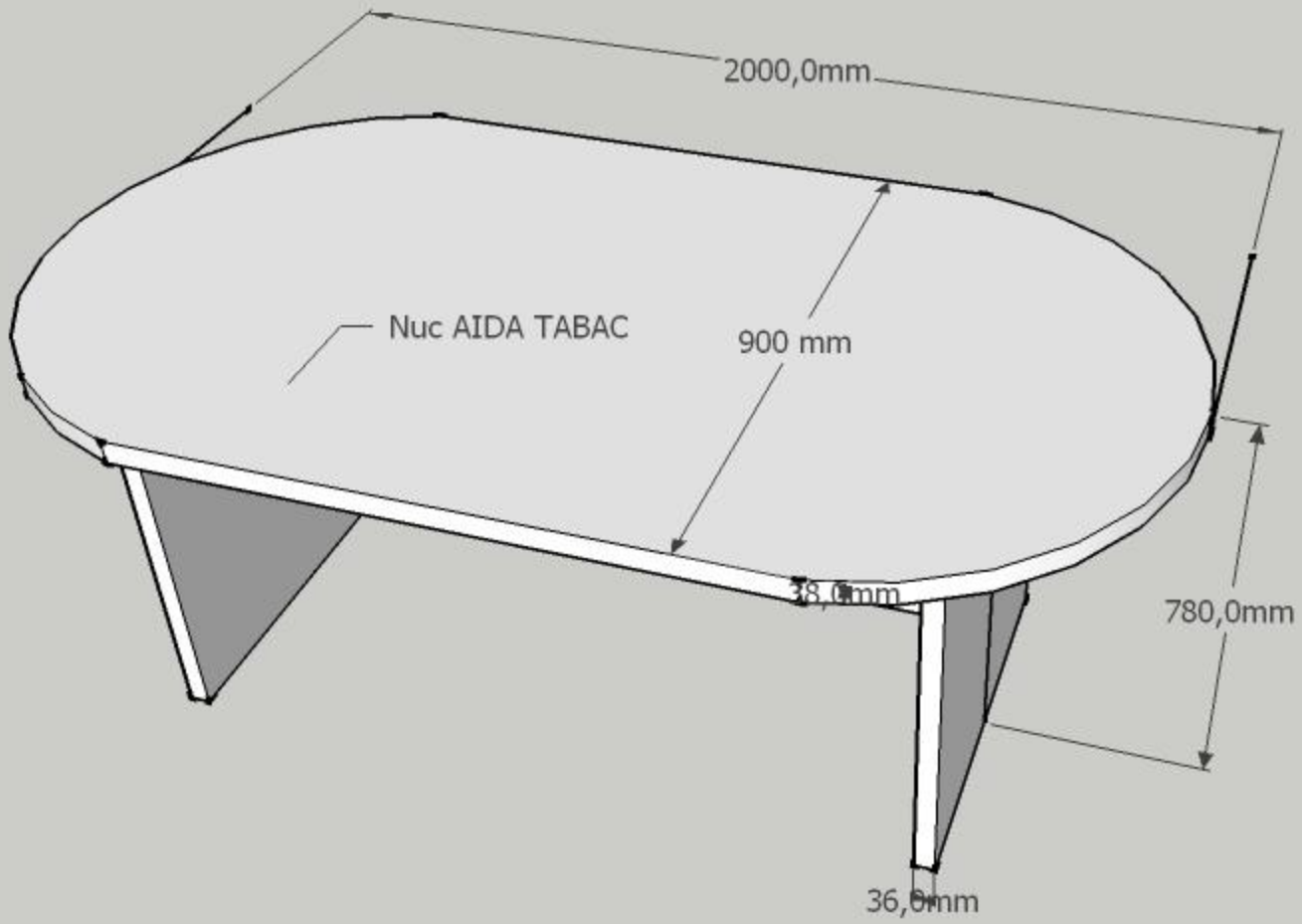
2000,0mm
Nuc AIDA TABAC
900 mm
780,0mm
36,0mm

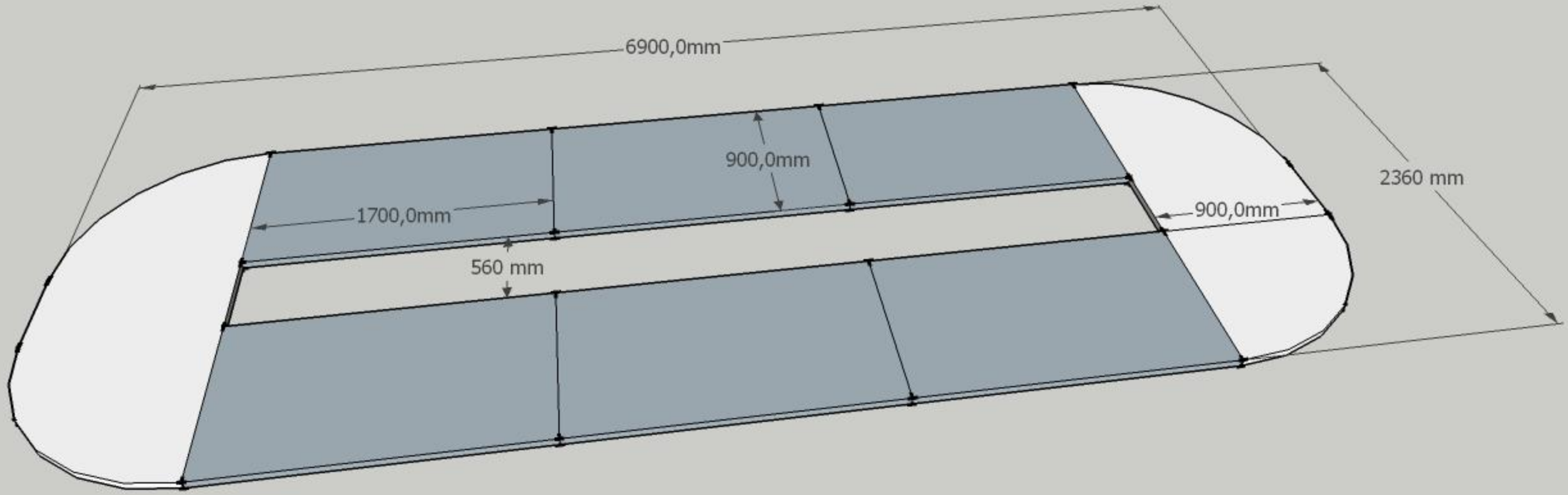
6900,0mm
900,0mm
2360 mm
1700,0mm
900,0mm
560 mm

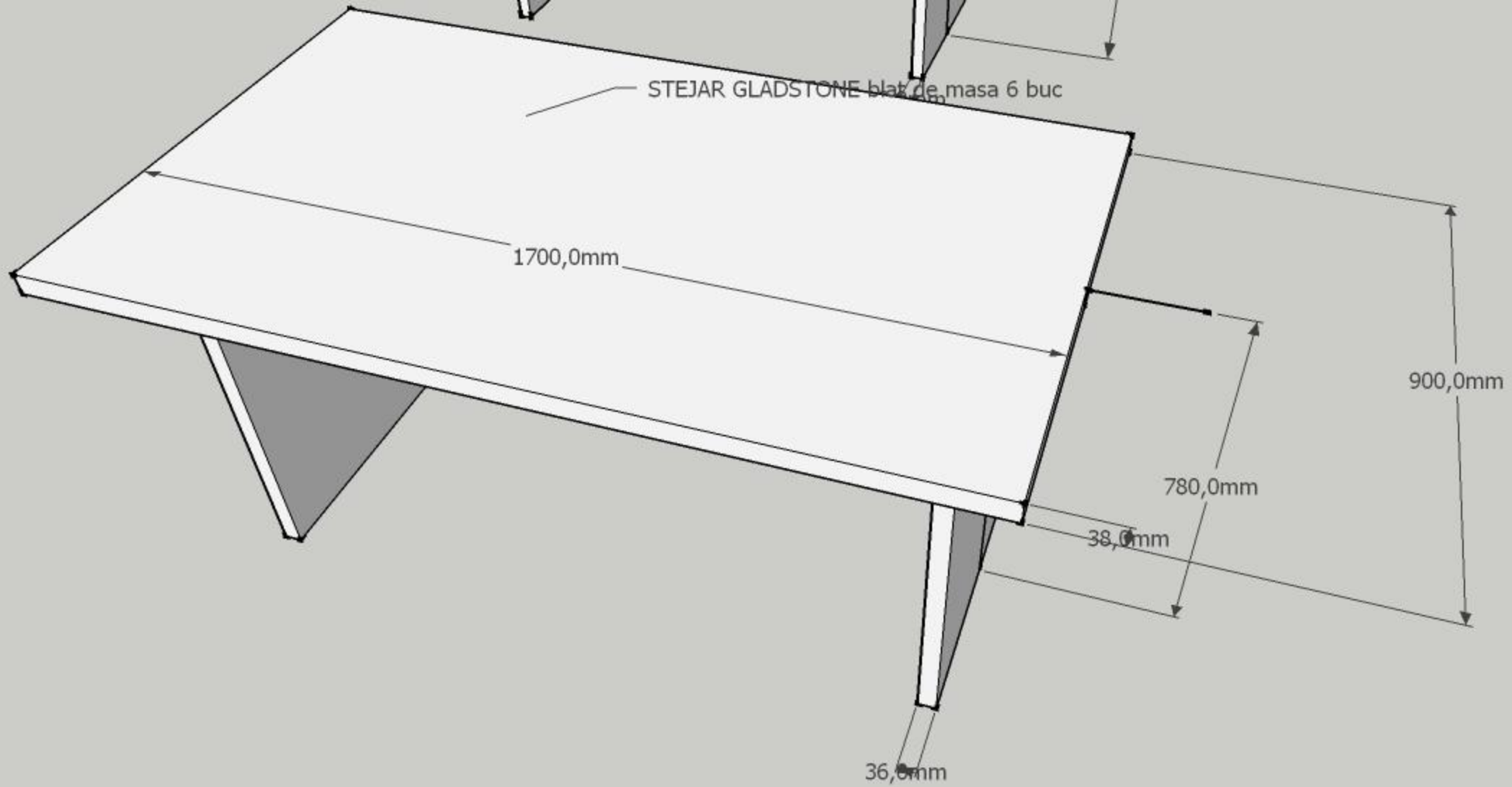
STEJAR GLADSTONE blat de masa 6 buc
1700,0mm
900,0mm
780,0mm
38,0mm
36,0mm

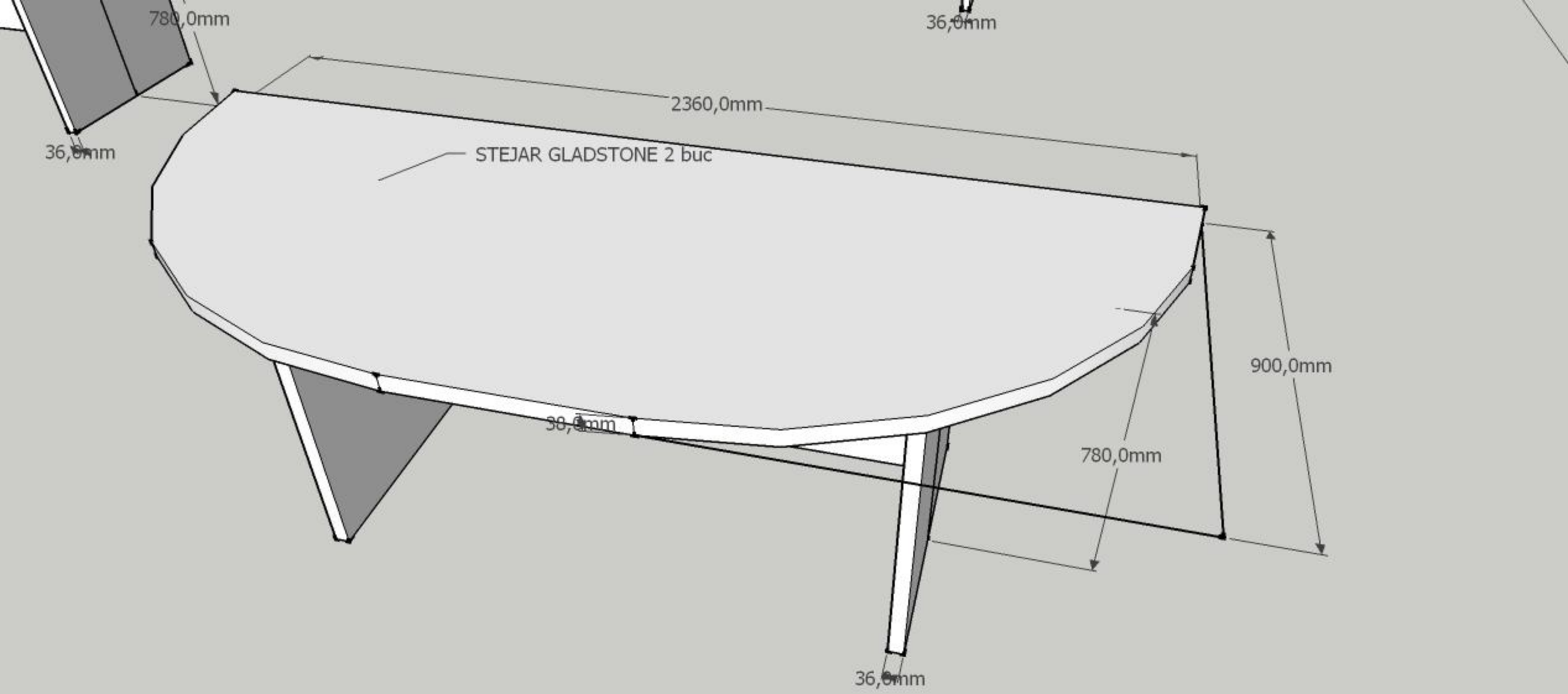
780,0mm
36,0mm
2360,0mm
36,0mm
STEJAR GLADSTONE 2 buc
900,0mm
38,0mm
780,0mm
36,0mm

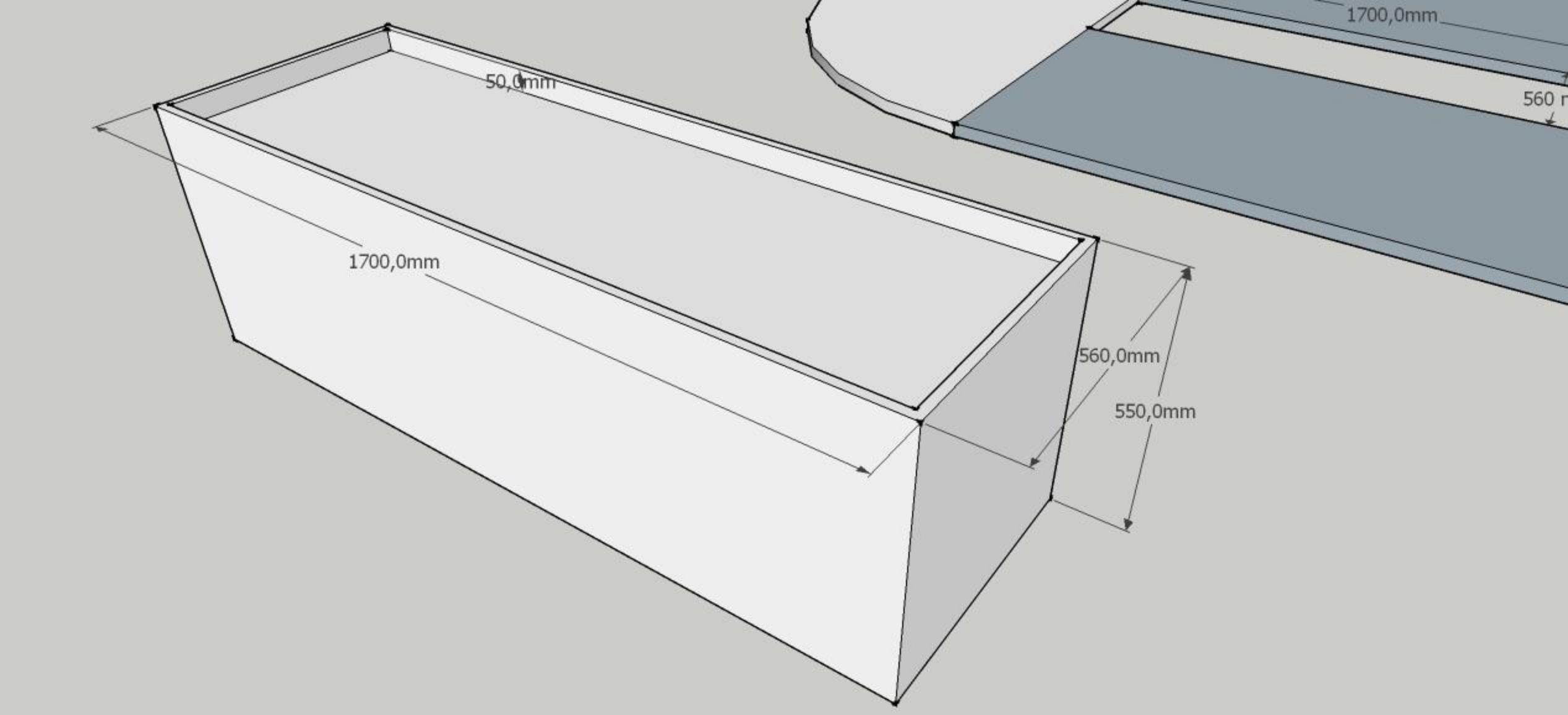
1700,0mm
560 m
50,0mm
1700,0mm
560,0mm
550,0mm

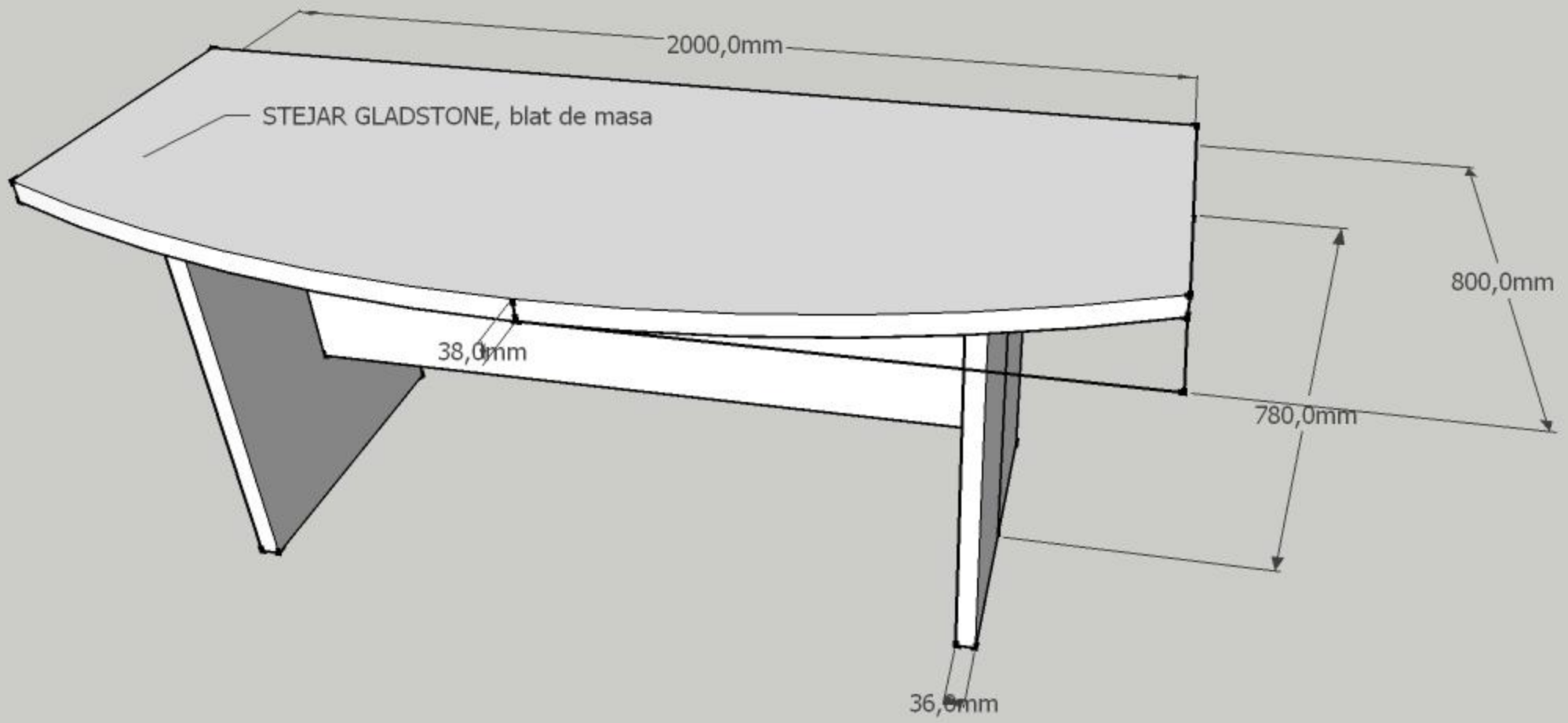
2000,0mm
STEJAR GLADSTONE, blat de masa
800,0mm
38,0mm
780,0mm
36,0mm